1 - MODELS:

MOD 100-HX
MOD 200-HX and MOD 400-HX
MOD 200-GX and MOD 400-GX
MOD 200-FX and MOD 400-FX
MOD 200-EX and MOD 400-EX
OPTIONS

2 - GENERAL DESCRIPTIONS:

AIR CLEAN is equipment developed to eliminate oil mist in machine tools that use cutting oil: Soluble or Integral. It was built and tested for the most rigorous industrial use situations. Its function is to separate the mist from the air, by centrifugation, and filter the solids: in this centrifugation, the absence of mist in the air, routed to the outside of the machine, reaches 99.95% efficiency, when the filtering elements are properly maintained. The centrifuged oil returns to the inside of the machine to be reused. After centrifugation, the air goes through two more stages of static filtration, which ensures the removal of final solids from the air. *AIR CLEAN* has low noise and vibration levels, high robustness and reliability. Its design is aimed at low maintenance and ease of preventive maintenance. It creates a negative pressure (vacuum) inside the machine, which ensures the removal of oil mist. We have developed our own technology (inertia mass) that reduces unbalance when solid residue is inserted along with the oil mist.

To contact us:
Phone/WhatsApp: **051 9 9999 9091**
E-mail: airclean@airclean.com.br
Website: www.airclean.com.br

3 – TECHNICAL SPECIFICATIONS OF THE PRODUCTS:

Technical data table, Flow and Efficiency Table MOD 100 (HX).

FLOW at -1 atm. (table)	750	m3/h
POWER	1	HP
ROTATION	3.450	rpm
NOISE LEVEL	< 49 - raio de 1 metro	db
WEIGHT	29	kg
EFFICIENCY	99,95	% Solids filtration
WORKING TENSION	220 / 380 / 440 V- 60 Hz	V
NOMINAL EL. CURRENT	2,91 / 1,68 / 1,46 A- 60 Hz	A
SOLIDS FILTERING	>= O,3	µ
COUPLINGS	Ø100 (4")	Ø mm (inches)
ROTOR MODEL	270 / 4	Ø mm / blades

Tabela de dados Técnicos, Fluxo e Tabela de Eficiência MOD 200 (EX/FX/GX/HX).

FLOW at -1 atm. (table)	1.450	m3/h
POWER	2	HP
ROTATION	3.450	rpm
NOISE LEVEL	< 55 - raio de 1 metro	db
WEIGHT	38	kg
EFFICIENCY	99,95	% Solids filtration
WORKING TENSION	220 / 380 / 440 V- 60 Hz	V
NOMINAL EL. CURRENT	5,64 / 3,27 / 2,82 A- 60 Hz	A
SOLIDS FILTERING	>= O,3	µ
COUPLINGS	Ø150 (6")	Ø mm (inches)
ROTOR MODEL	270 / 8	Ø mm / blades

Tabela de dados Técnicos, Fluxo e Tabela de Eficiência MOD 400 (EX/FX/GX/HX).

FLOW at -1 atm. (table)	2.250	m3/h
POWER	4	HP
ROTATION	3.450	rpm
NOISE LEVEL	< 68 - raio de 1 metro	db
WEIGHT	55	kg
EFFICIENCY	99,95	% Solids filtration
WORKING TENSION	220 / 380 / 440 V- 60 Hz	V
NOMINAL EL. CURRENT	8,39 / 4,86 / 4,20 A- 60 Hz	A
SOLIDS FILTERING	>= O,3	µ
COUPLINGS	Ø 203 (8")	Ø mm (inches)
ROTOR MODEL	400 / 8	Ø mm / blades

4 – INSTALLATION INFORMATION:

a) The ***AIR CLEAN*** was built for horizontal operation; do not install it vertically, or the engine's useful life will be reduced. This horizontal construction has a technical reason: the motorization (electric motor) has ball bearings and is not designed to suffer axial loads but rather radial ones. In this horizontal configuration, its lifespan triples.

b) To facilitate installation, all external measurements for fixing the 100HX, 200HX, 400HX Filters and their most commonly used options, are equal.

c) It can be fixed on a pedestal or on the machine, in both cases analyzing the robustness capable of resisting the dynamic and mechanical forces of the equipment. The pedestal is supplied with a maximum height of 2 meters, with a base strong enough to guarantee ***AIR CLEAN*** performance and comply with NR12. The Filter can be fixed on the machine, it already has a linear base on its body that must be used, this installation must take into account whether the machine has the capacity to support the weight of the equipment, this base is the same for any model of filter; dimensions below.

d) Other options can be used, depending on the proposed layout.
The diagrams do not show the oil returns to the machine. This return is done via a ¾" hose that is connected to the base of the AIR CLEAN and must be taken inside the machine or to the cutting oil tank (be careful not to choke the outlet of this hose, as it could clog the filter lose income).

Universal Linear Base – All models.

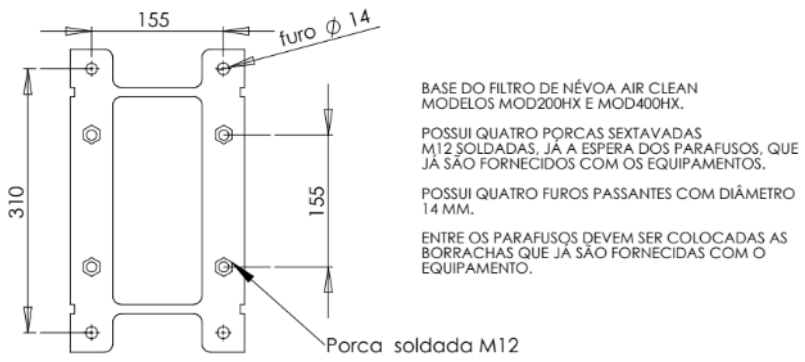

External Measurements and Coupling and Fixing of the AIR CLEAN PEDESTAL

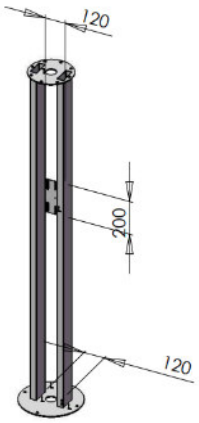

External Measurements and coupling and Fixing of the PRE-FILTER 150/200mm

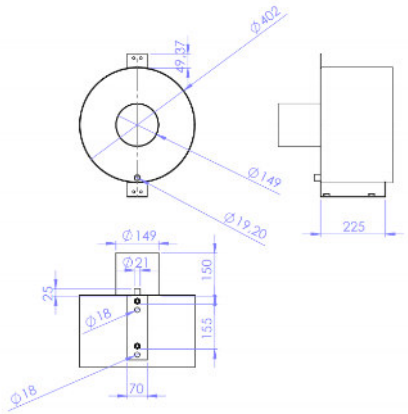

External Measurements and Coupling & Fixing of the MOD 100HX

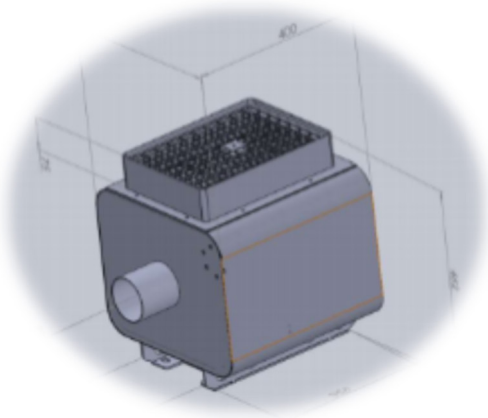

External Measurements and Coupling & Fixing of the MOD 200HX

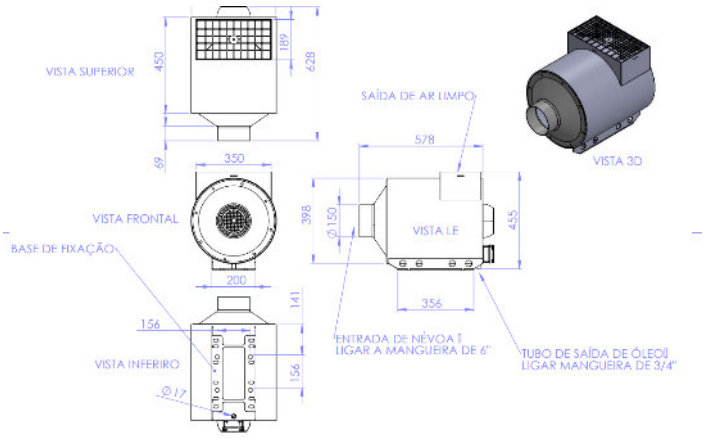

External Measurements and Coupling & Fixing of the MOD 400HX

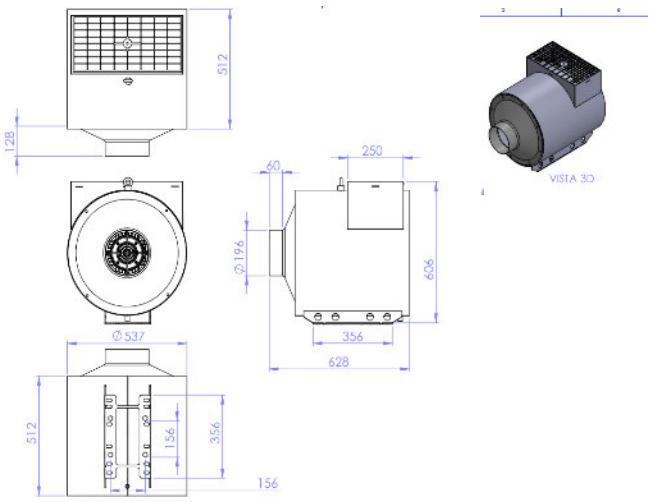

5 – BASIC LAYOUTS:

Below are the most basic and most used Layouts in Mist filter installations. At the end there are more installation examples, with more complex ways and also with options. Choose the Layout that best applies to your machine.

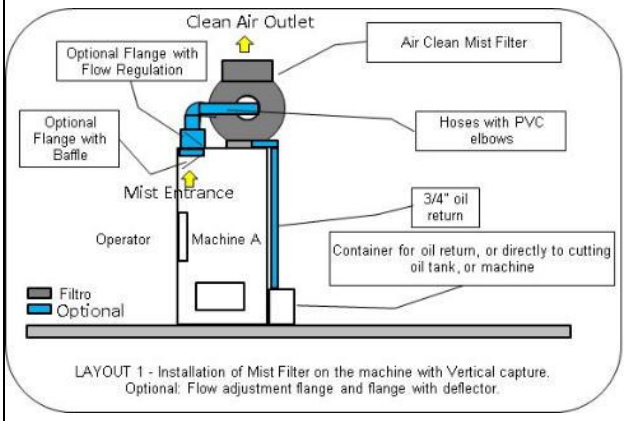

LAYOUT 1 - Installation of Mist Filter on the machine with Vertical capture.
Optional: Flow adjustment flange and flange with deflector.

Installing a Mist Filter on the machine is the most common way because it is simple and does not take up space on the factory floor.
a) It has the advantage that the filtered oil returns directly to the machine.
b) Requires fewer installation materials.
c) The linear foot of the Filters is already made for this fixation, it distributes the weight of the Filter on the machine.
d) Options are offered to facilitate installation and increase filter productivity. As the word suggests, they can be suppressed if the machine already has them or the application does not justify them.
- The flow regulator flange has two basic functions, regulating the flow and reducing electrical energy consumption.
- Flange with deflector prevents oil from being directed right into the filter, thus increasing the useful life of the preventive KITs.

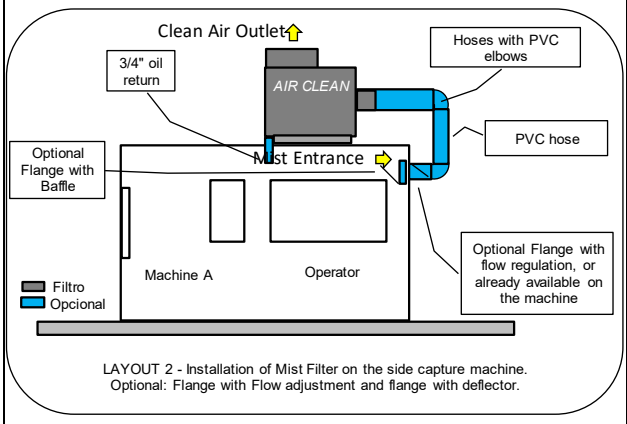

LAYOUT 2 - Installation of Mist Filter on the side capture machine.
Optional: Flange with Flow adjustment and flange with deflector.

LAYOUT 2 - Installation of Mist Filter on the side capture machine.
Optional: Flange with Flow adjustment and Flange with Deflector.

Installation of a Mist Filter on the machine; it's the most common way because it is simple and does not take up space on the factory floor.
a) It has the advantages that the filtered oil returns directly to the machine.
b) Requires fewer installation materials.
c) The linear foot of the Filters is already made for this fixation, it distributes the weight of the Filter on the machine.
d) Options are offered to facilitate installation and increase filter productivity. As the word suggests, they can be suppressed if the machine already has them or the application does not justify them.
- The flow regulator flange has two basic functions, regulating the flow and reducing electrical energy consumption.

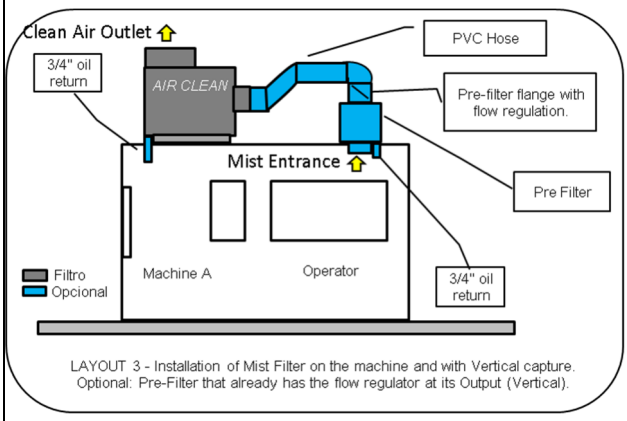

LAYOUT 3 - Installation of Mist Filter on the machine and with Vertical capture.
Optional: Pre-Filter that already has the flow regulator at its Output (Vertical).

LAYOUT 3 - Installation of Mist Filter on the machine and with Vertical capture.
Optional: Pre-Filter that already has the flow regulator at its outlet (vertical).

Installation of a Mist Filter with Pre-Filter is the installation method for machines that have small operating cabins and that generate large volumes of mist, such as tool sharpeners.
We do not suggest the Flange with Deflector, the Pre-filter already has this element internally.

a) It has the advantages of having two filtration stages (one static: Pre-Filter, and another dynamic: Centrifugal Filter).
b) Reduces the cost of preventive filter KITs and ease of maintenance in these changes.
c) The oil returns to the machine directly, both in the Filter and Pre-Filter.
D) Low cost in installation and preventive maintenance.
It is one of the most efficient oil mist filtration configurations.

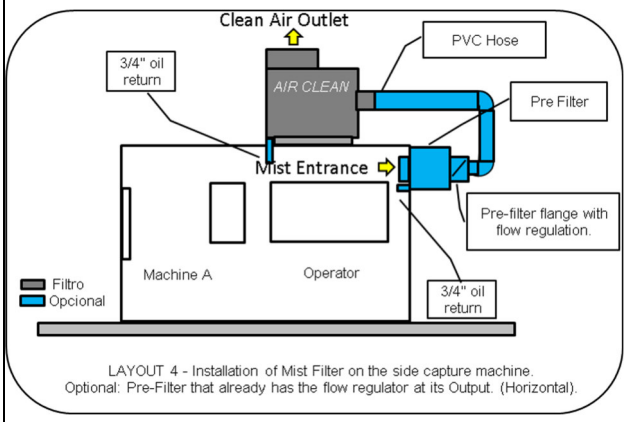

LAYOUT 4 - Installation of Mist Filter on the side capture machine.
Optional: Pre-Filter that already has the flow regulator at its Output. (Horizontal).

LAYOUT 4 - Installation of Mist Filter on the side capture machine.
Optional: Pre-Filter that already has the flow regulator at its outlet (horizontal).

This configuration differs from Layout 3 only in the position of the Pre-Filter.
Installation of a Mist Filter with Pre-filter is the installation method for machines that have small operating cabins and that generate large volumes of mist, such as tool sharpeners.
We do not suggest the Flange with Deflector, the Pre-filter already has this element internally.
a) It has the advantages of having two filtration stages (one static: Pre-Filter, and another dynamic: Centrifugal Filter).
b) Reduces the cost of preventive filter KITs and ease of maintenance in these changes.
c) The oil returns to the machine directly, both in the Filter and Pre-filter.
D) Low cost in installation and preventive maintenance.
It is one of the most efficient oil mist filtration configurations.

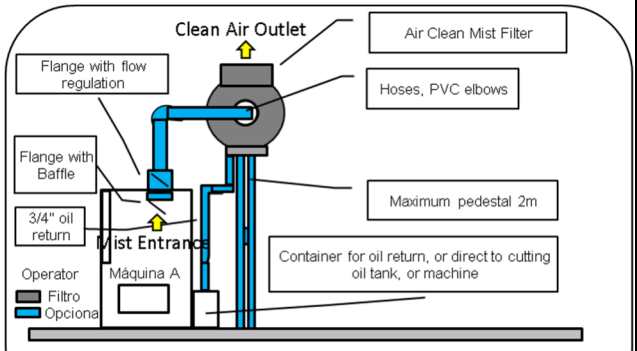

LAYOUT 5 - Installation of Filter on Pedestal with Vertical capture.
Options: Flange with Flow Adjustment and Flange with Deflector

LAYOUT 5 - Installation of Filter on Pedestal with Vertical capture.
Optional: Flange with Flow Adjustment and Flange with Deflector.

Installing a Mist Filter on a pedestal facilitates maintenance and prevents any vibration from being transferred to the process.
It has the advantages of facilitating the layout where the machine has many components in its outline.
a) It has a longer ¾" hose and larger mist removal hoses.
b) Options are offered to facilitate installation and increase filter productivity. As the word suggests, they can be suppressed if the machine already has them or the application does not justify them.
- The flow regulator flange has two basic functions, regulating the flow and reducing electrical energy consumption.
- Flange with deflector prevents oil from being directed right into the filter, thus increasing the useful life of the preventive KITs.

6 – TYPES OF OPTIONAL INSTALLATIONS:

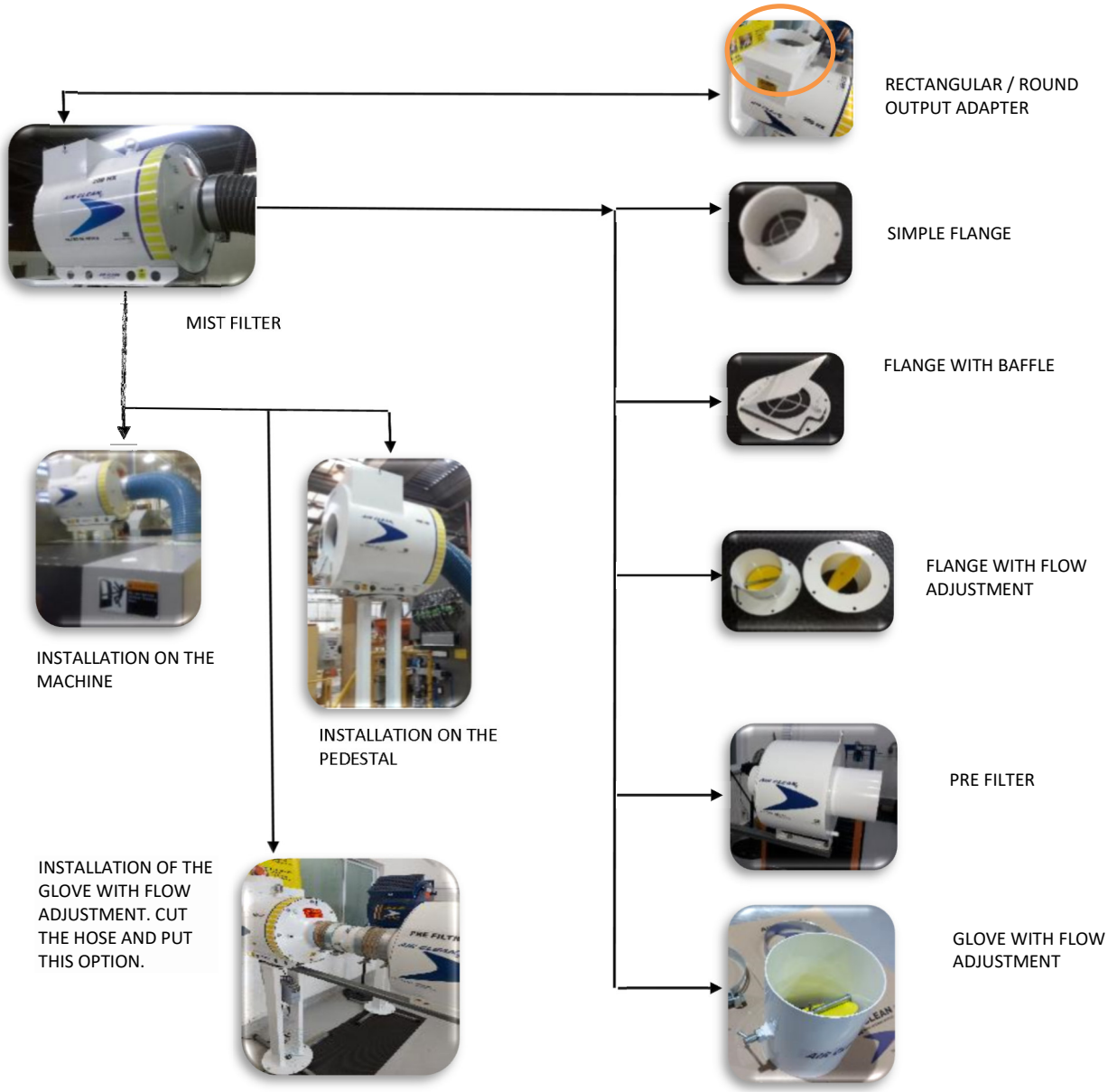

CAUTION: The pedestal must be fixed with the appropriate screws and the base concrete must be very firm and solid to prevent the screws from loosening (FCK >= 150). Failure to comply with this directive makes the set dangerous for use.

c) Hoses must be as short as possible; avoid curves and very tight angles. Pressure losses in the air flow that AIR CLEAN will remove from inside the machine must be avoided as much as possible. After placing the hoses, the clamps must be very tight to prevent the entry of false air and prevent oil leaks when the equipment is turned off.

d) The electrical connection for this equipment is only the electrical motor connection. Check the model being connected and check the wires to meet the rated current or voltage drop criteria (minimum #2.5 mm2). Check your mains voltage and connect the engine according to the manufacturer's plate (the motor plate is fixed inside the electrical box, on the back of the filter). Ground the assembly to the machine.
AIR CLEAN already comes with the engine grounded. We advise you to make the connection, either with the optional AIR CLEAN protection box or with other protective equipment in order to avoid possible short circuit or overload. In AIR CLEAN, the direction of rotation is not important. It has the same yield in any sense. It also does not loosen the rotor, as it has a safety key to avoid this problem.

CAUTION: Never turn on the AIR CLEAN open (without the pan in place); the exposed rotor has high speeds and can cause permanent damage to unsuspecting people. It has a very high suction power, being able to vacuum cloths, objects or even a person's hand. Always wait for the rotor to completely stop before opening. We suggest that it be switched off/disconnected from power in case of maintenance (use lockouts).

7 – INSTALLATION:

7.1 - Next, all the steps for the mechanical and electrical installation of the Air Clean Mist Filters will be given.

7.2 - Mechanical Installation

- Required tools:
  - 01 industrial drilling machine.
  - 01 12 mm high speed steel drill
  - 01 8 mm high speed steel drill
  - 01 industrial optical optical machine.
  - 01 jigsaw blade for sawing sheets up to #3 mm.
  - 01 10/11 open-end wrench.
  - 01 12/13 open-end wrench.
  - 01 14/15 open-end wrench.
  - 01 18/19 open-end wrench.
  - 01 M4 Allen key
  - 01 M6 Allen key
  - 01 M8 Allen key
  - 01 ½" long screwdriver
  - 01 long ¾" screwdriver
  - 01 stylus.
  - 01 a white or gray or black Polypropylene-based seal tube and applicator.

- Materials needed for a Mist Filter:
  - Models 100 (HX).
  - 04 meters of ¾" transparent or braided hose (this measurement depends on the distance from the return tank).
  - 01 ¾" clamp
  - 03 meters or more of 4" Espiraflex hose - for 100 models
  - 02 4" wide steel clamps - for 100 models

04 nitrile rubbers (supplied)
04 hexagonal screws M12 x 50 - pitch 1.75 (supplied)
04 M14 x 80mm parabolts if using a pedestal.
06 M8 Allen screws with nut.
01 optional to attach the machine. Example - Flange without 4" pre-filter

Models 200 (HX).

04 meters of ¾" transparent or braided hose (this measurement depends on the distance from the return tank).
01 ¾" clamp
03 meters or more of 6" Espiraflex hose - for 200 models
02 6" wide steel clamps - for 200 models
04 nitrile rubbers (supplied)
04 hexagonal screws M12 x 50 - Pitch 1.75 (supplied)
04 M14 x 80mm parabolts if using a pedestal.
06 M8 Allen screws with nut.
01 optional to attach the machine. Example - Flange without 6" pre-filter

Models 400 (HX).

04 meters of ¾" transparent or braided hose (this measurement depends on the distance from the return tank).
01 ¾" clamp
03 meters or more of 8 "Espiraflex hose - for 400 models
02 8" wide steel clamps - for 400 models
04 hexagonal screws M12 x 50 - Pitch 1.75 (supplied)
04 nitrile rubbers (supplied)
04 M14 x 80mm parabolts if using a pedestal.
06 M8 Allen screws with nut.
01 optional to attach the machine. Example - Flange without 8" pre-filter

7.3 – Assembly sequence

a) **MIST CATCHING POINT** - Define on the machine the point where the Flange will be placed, the choice of this point is fundamental in the operation of the Mist Filter. Normally, the machine already comes with a factory-defined point for the flange, but if there is not, choose a point far from the machining, to prevent the Filter from separating oil instead of mist.

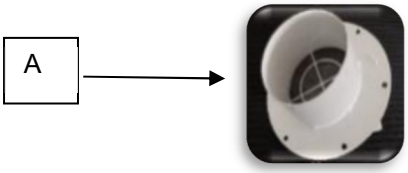

b) **USING SINGLE FLANGE**: If using a Single Flange (A), the distance from the Flange to the point of operation (machining) must be at least 1 meter, otherwise the suction will suck pure oil and solid particles into the filter, and this oil will exit through the back of the filter and the solid particles will quickly saturate the filter. It is not designed to filter oil, just mist.

B

c) **USING FLANGE WITH SOLID DEFLECTOR**: If using Flange with deflector (B), the distance from the Pre-filter to the operating point must be a minimum of 0.50 meters and a maximum of 1.5 meters. The baffle plate is very important, it prevents solid particles from the process and oil splashes from being sucked into the filter.
We recommend using this Flange only where the mist density is very high and there is the possibility of pure oil splashing at this point.

C

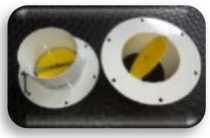

d) **USING FLOW ADJUSTMENT FLANGES**: If using a flow adjustment flange ©. This option is the most recommended; in addition to adjusting the filter flow to your process, it brings significant energy savings. The engine power varies proportionally to the closing and opening of the Flange with flow adjustment, it reduces the flow, but does not change the effectiveness of the filter, because it does not modify the engine rotation.
The distance from the Pre-filter to the operating point must be at least 1 meter, otherwise the suction will suck pure oil and solid particles into the filter, and this oil will exit through the back of the filter and the solid particles will saturate the filter quickly. It is not designed to filter oil, just mist.

D

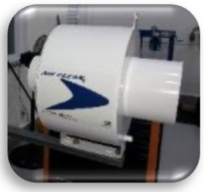

TYPICAL APPLICATION OF THE PREFILTER VERTICALLY.

TYPICAL APPLICATION OF THE PRE-FILTER HORIZONTALLY.

e) **USING THE PRE OR POST FILTER**: The Pre-filter (D) in most applications replaces the optional flanges (simple, with baffle plate or with flow adjustment), see the photo as an example of a typical application.

This Pre-filter can be used vertically like the photo or horizontally on a support or

pedestal. For the vertical position, many advantages are added, as the oil outlet will already be positioned inside the machine, the drilling is the same as the other flanges. It also facilitates the exchange of preventive maintenance refills.

f) **DEFINING THE PRE-FILTER CAPTURE POINT**: The point where the Flange will be placed is very important in the filtration result and will also define the distance from the hose, which should not be greater than 3 meters.
After this definition, mark the central hole, which can be 4, 6 or 8 inches. Using the jigsaw, make the hole so that the flange passes through it. This flange is where the suction hose will be secured from the outside with the clamps and will go to the front nozzle of the mist filter.
After the central hole is opened, mark four holes for the M8 screws and nuts that will fix this flange to the machine fairing, between the machine and the flange, and apply a Polypropylene-based seal (do not use silicone). Tighten the bolts with the nuts and this step is done.

g) **ATTACHING THE FILTER**: The filter must be positioned on the machine or pedestal in order to facilitate future maintenance. Also observe the resistance of the base where it will be fixed. The Filter has a linear base with 8 holes, 4 of which have M12 nuts, already welded to the linear base and their measurement is standard for all models. To attach it to the pedestal, simply place the filter on the pedestal and place the screws and secure it to the nuts. Between the screws and the linear base of the filter, the supplied nitrile rubbers must be placed. These rubbers have the function of minimizing vibrations.
Of the 4 M12 screws, two have a hole at the top where two safety pins (supplied) must be placed. See the photos below.

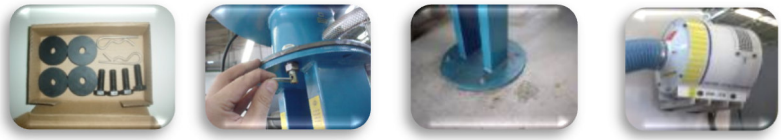

h) **HOSES AND CLAMPS**: With the filter attached and the flange, place the two 4 or 6- or 8-inch clamps on the pipe and attach one to the front nozzle of the filter and the other to the flange or Pre-Filter. For this fixation it is not necessary to add a Polypropylene-based seal, just tighten the clamps.
The same process must be done with the ¾ inch hose, attaching the hose to the tube at the bottom of the filter. This ¾ hose must be taken to the return point where the filtered oil will be returned to the machine.

The previous steps are necessary so that the mist filter is ready for when the electrical part will be done.

i) USING GLOVE WITH FLOW ADJUSTMENT:

This option is the simplest to install, just cut the hose at the best point and place this option, securing it with two clamps. Afterwards, it will be easy to adjust the filter flow to meet the needs of your process and with the advantage of saving energy. As a filter it works like a centrifugal oil pump, only it uses mist, when the inlet is closed the power consumption is reduced. This occurs without losing filter efficiency, as the rotation remains the same.

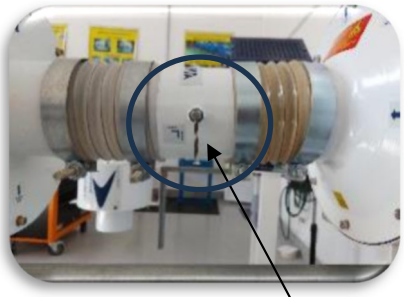

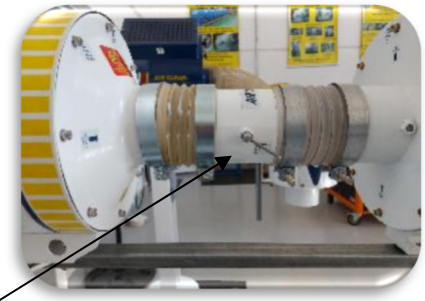

ADJUSTMENT IS MADE THROUGH THIS DEVICE. AFTER ADJUSTING THE FLOW, TIGHTEN THE FIXING DOOR.

j) USING OUTPUT ADAPTERS:

Top outlet adapter from rectangular to round.

This option is often necessary where there is a central collection system, or you want to place the exhaust air outside the room where the filter is located. It has an outlet the size of a hose, tube or PVC bend, making installation easier.

It has a red silicone gasket to prevent leaks. It is fixed using the screw that fixes the upper filter grid (it is advisable not to remove the grid, leaving it in place, so it will not be lost and can be used in the future without the adapter).

Installation of the Air Clean Mist Filter.

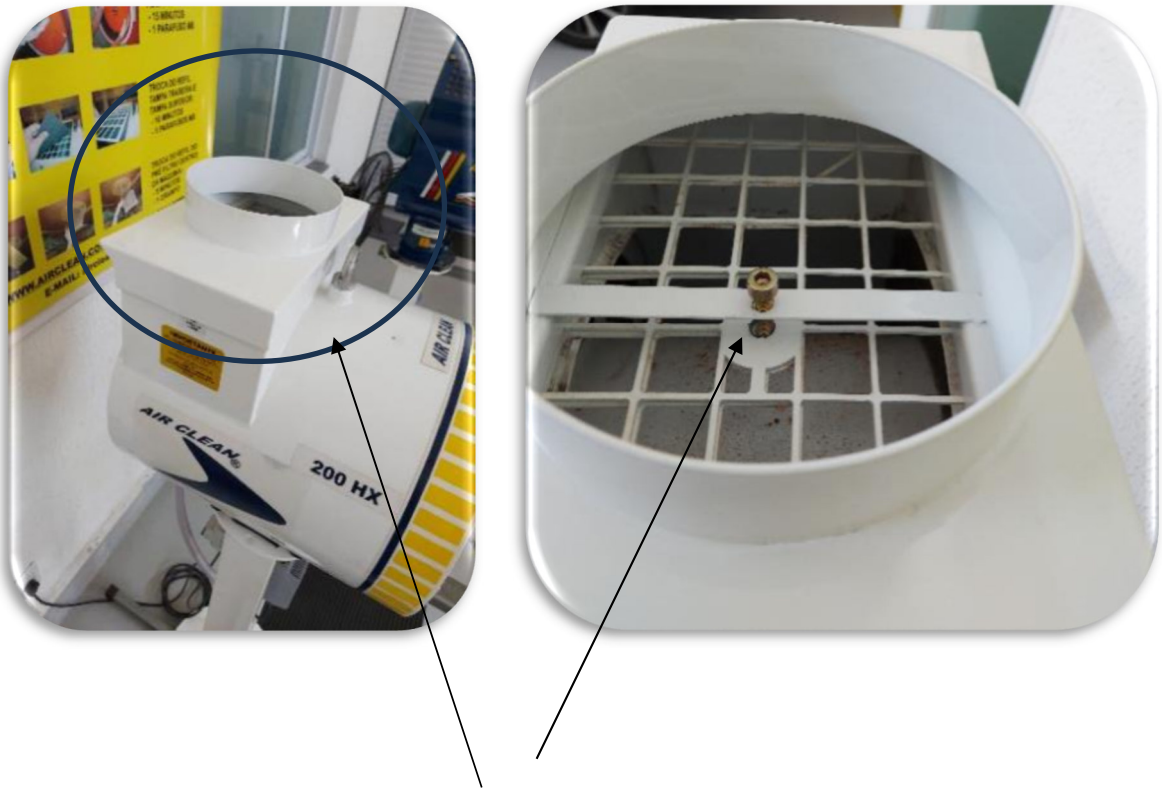

FIXING IS MADE THROUGH THE SCREW THAT FIXES THE UPPER GRID (KEEP THE GRID IN PLACE TO NOT LOSE IT, BUT REMOVE THE 3M FILTER ELEMENT).

It is advisable to keep the upper grille, whether or not you remove the refill. This grid will not cause a loss in filter efficiency and if it is necessary to use the filter where the adapter is not necessary, the filter will be as factory.

We also supply hoses, clamps, PVC parts (Bends, T, Y, Sleeves and tubes of 100, 150 and 200 mm in diameter), all the options to make assembling and installing the filter as easy as possible.

7.4 - Electrical Installation

- Required tools:

01 Multimeter.
01 ammeter.
01 ½" long screwdriver
01 long ¾" screwdriver
01 stylus.
01 cutting pliers.

- Materials needed for a Mist Filter:

Models 100/200/400
XX meters of flexible cable 4 x 2.5 mm2 covered
01 connector bar with 4 terminals.

01 roll of good quality insulating tape (3M / SCOTCH).
Important - 01 three-phase protection circuit breaker (see the motor plate in the equipment specifications): this circuit breaker will depend on the voltage at which your filter is connected (see the motor plate).

Note: Do not connect the filter without the protection of a suitable thermo-magnetic circuit breaker; If there is a short circuit or a rotor blockage, the motor will burn if it does not have the appropriate protections.

- Assembly Sequence:

a) After the filter is attached, open the electrical motor cover on the back of the filter. Inside the engine cover is the engine connection plate. You must know what voltage is available in your factory and connect the wires correctly. The motor always leaves the factory with a three-phase 380v connection.
Air Clean motors have three voltages available (220/380/440 V), choose the connection for your needs and connect the wires according to the motor plate. After the ends are already connected according to the board, connect the connector bar to secure the wires or use a high-fusion insulating tape.
With the voltage off, turn on the protection circuit breaker, depending on the type of engine.

b) Bring the cable with the four #2.5 mm² wires from the protection circuit breaker up to the filter and connect the three phases to the terminals, with the fourth wire (green / yellow) connected to the motor box ground. Regardless of the phase sequence, Air Clean has the same performance in any direction of rotation and the rotor will not come off the shaft due to being keyed.
After these steps are completed, check that everything is fixed and that the front cover is closed.
Turn on the circuit breaker, the filter will turn on. Observe whether there is any vibration, if this occurs, turn off the filter and check whether all screws are correctly tightened.
Air Clean has already been tested and meets the vibration levels according to technical specifications.
As shown in the figure below, place the ammeter and measure the nominal current, which must be within the specifications on the motor plate. After measuring the current, adjust the protection relay and close the electrical box. The equipment is now ready for use.

Comments:
The NR12 standard requires a circuit breaker for electrical protection of the motor and an on/off switch attached.
Many machines already have the installation for the Mist Filter.
If you want to automate the connection of the filter when the machine is turned on, you can place a contactor and an on/off control at an easily accessible point.
We do not recommend turning the filter on and off for each cycle, as well as using more energy, the Filter's efficiency will be compromised. It must remain on even with the cycle completed to remove the fog that remains from the process.

The installation of the protection switch, circuit breaker, on/off switch or frequency inverter can be installed on the Air Clean pedestal itself. We placed a plate with multi-holes between the two feet of the pedestal, facilitating this installation and also protecting these components from accidental knocks.

The Air Clean Mist Filter has an eyelet (80kg) on the top to facilitate transport and installation.

See the photos below:

On the Air Clean pedestal there is a plate where the Circuit Breaker must be installed, with physical protections to avoid mechanical shocks.

1HP and 2HP engine connections (Models 200 - HX).

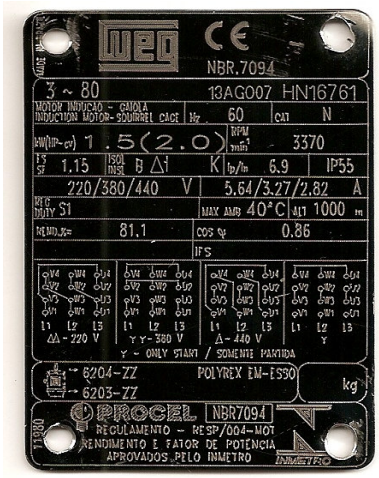

a) 220v Double Triangle – Three Phase.

L1 → V1+V3+U2+U4
L2 → V2+V4+W1+W3
L3 → U1+U3+W2+W4
Don't forget the ground wire.

b) 380v Double star – Three phase.

L1 → V1+V3
L2 → W1+W3
L3 → U1+U3
Ponte → V4+W4+U4
Ponte → V2+W2+U2
Don't forget the ground wire.

c) 440v Triangle – Three-phase.

L1 → V1+U4
L2 → W1+V4
L3 → U1+W4
Don't forget the ground wire.

4 HP engine connections (Models 400 - HX)

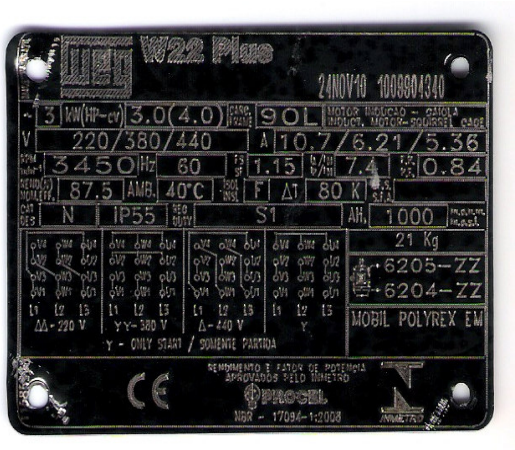

a) 220v Double Triangle – Three Phase.

L1 → V1+V3+U2+U4
L2 → V2+V4+W1+W3
L3 → U1+U3+W2+W4
Don't forget the ground wire.

b) 380v Double star – Three phase.

L1 → V1+V3
L2 → W1+W3
L3 → U1+U3
Ponte → V4+W4+U4
Ponte → V2+W2+U2
Don't forget the ground wire.

c) 440v Triangle – Three-phase.

L1 → V1+U4
L2 → W1+V4
L3 → U1+W4
Don't forget the ground wire.

WEG STARTER WRENCH CHART – may be another similar brand of good quality.

For Air Clean Filters:

MOD100 In = 1.57 A / 380V
MOD200 In = 3,27 A / 380V
MOD400 In = 6,21 A / 380V

Note: Always check the motor plate at which voltage the motor is being turned on, to define the switch and protection.

Esquemas de Ligação

PDW

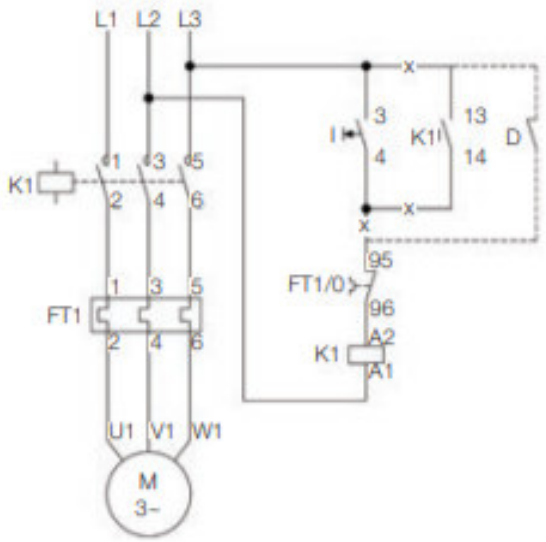

TYPICAL APPLICATION of the most commonly used simple circuit breaker.

For direct starting, a simple three-phase circuit breaker can be used.

If the machine already has protection, you can also use a three-phase selector switch.

If your equipment has a frequency inverter, please download the file from the Air Clean website (www.airclean.com.br):

Air Clean - IT-002 - LIGAÇÕES E PROGRAMAÇÃO DO INVERSOR.pdf

Chaves de Partida em Caixa Termoplástica

Partida Direta Trifásica- PDW

Composição: Contator + Relé de Sobrecarga

Motores trifásicos WEG W22 - 4 polos - 60 Hz[1]			Referência básica para completar com potência, tensão e acionamento[4]	Faixa de ajuste do relé de sobrecarga (A)	Máxima corrente nominal I_e (A)	Fusível recomendado (A)
220 V ca cv	380 V ca cv	440 V ca cv				
-	0,16	-	PDW02 - ☐ ■■■▲	(0,4 - 0,63)	0,63	2
-	0,25	-		(0,56 - 0,8)	0,8	2
0,16	0,33	-		(0,8 - 1,2)	1,2	2
0,25	-	-		(1,2 - 1,8)	1,8	2
0,33	0,5 - 0,75	-		(1,2 - 1,8)	1,8	4
0,5	-	-		(1,8 - 2,8)	2,8	4
-	1	-		(1,8 - 2,8)	2,8	6
-	1,5	-		(1,8 - 2,8)	2,8	10
0,75 - 1	2	-		(2,8 - 4)	4	10
1,5	3	-		(4 - 6,3)	6,3	10
2	-	-		(5,6 - 8)	7	16
-	4	-		(5,6 - 8)	7	20
-	-	0,16 - 0,25	PDW04 - ☐ ■■■▲ PDW05 - ☐ ■■■▲	(0,4 - 0,63)	0,63	2
-	-	0,33		(0,56 - 0,8)	0,8	2
-	-	0,5		(0,8 - 1,2)	1,2	2
-	-	0,75 - 1		(1,2 - 1,8)	1,8	4
-	-	1,5		(1,8 - 2,8)	2,8	10
-	-	2		(2,8 - 4)	4	10
-	-	3		(4 - 6,3)	6,3	10
-	-	4		(5,6 - 8)	8	16
-	-	5		(5,6 - 8)	8	20
3	5	-		(7 - 10)	9	20
-	-	6		(7- 10)	9	25
-	6	7,5		(8 - 12,5)	12	25
4	7,5	-		(10 - 15)	12	25
-	-	10		(10 - 15)	15	35
5	10	-		(11 - 17)	17	35
6	-	-		(15 - 23)	18	35
-	-	12,5		(15 - 23)	23	50
7,5	12,5	15		(15 - 23)	23	50
-	15	-		(22 - 32)	25	50

BELOW OTHER WAYS OF INSTALLING AIR CLEAN MIST FILTERS – USING OPTIONS AND POSITIONS:

SPECIAL LAYOUTS	
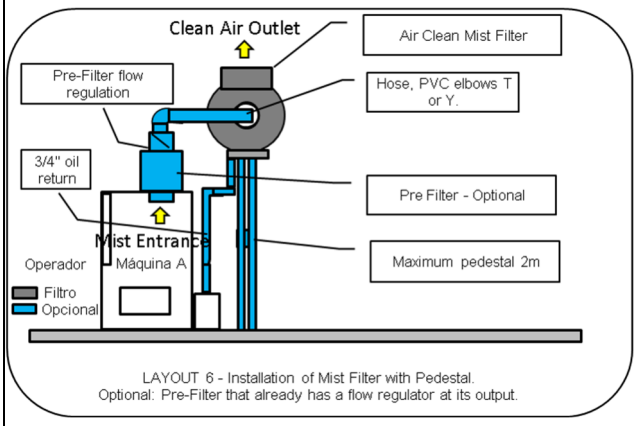 LAYOUT 6 - Installation of Mist Filter with Pedestal. Optional: Pre-Filter that already has a flow regulator at its output.	LAYOUT 6 - Installation of Mist Filter with Pedestal. Optional: Pre-Filter that already has a flow regulator at its output. Installation of a Mist Filter with Pre-filter is the installation method for machines that have small operating cabins and generate large volumes of mist, such as tool sharpeners. a) It has the advantage of having two filtration stages. b) Reduces the cost of preventive filter KITs and ease of maintenance in these changes. c) Options are offered to facilitate installation and increase filter productivity. As the name suggests, they can be suppressed if the machine already has them or the application does not require them. - The flow regulating flange is already installed with the Pre-filter and has two basic functions, regulating the flow and reducing electrical energy consumption. - Flange with deflector is not included in this layout because the Pre-filter already has a deflector plate internally.

Installation of the Air Clean Mist Filter.

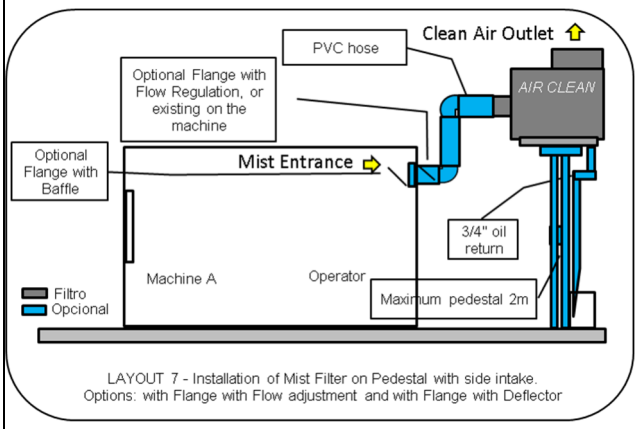

LAYOUT 7 - Installation of Mist Filter on Pedestal with side intake.
Options: with Flange with Flow adjustment and with Flange with Deflector

LAYOUT 7 - Installation of Mist Filter on Pedestal with side intake.
Optional: with Flange with Flow adjustment and with Flange with Deflector.

Installing a Mist Filter on a pedestal facilitates maintenance and prevents any vibration from being transferred to the process.
It has the advantages of facilitating the layout where the machine has many components in its contour.
a) It has the longest ¾" hose and larger mist removal hoses.
b) Optionals are offered to facilitate installation and increase filter productivity. As the name suggests, they can be suppressed if the machine already has them or the application does not justify them.
- The flow regulator flange has two basic functions, regulating the flow and reducing electrical energy consumption.
- Flange with deflector prevents oil from being thrown directly into the filter, thus increasing the useful life of the preventive KITs.

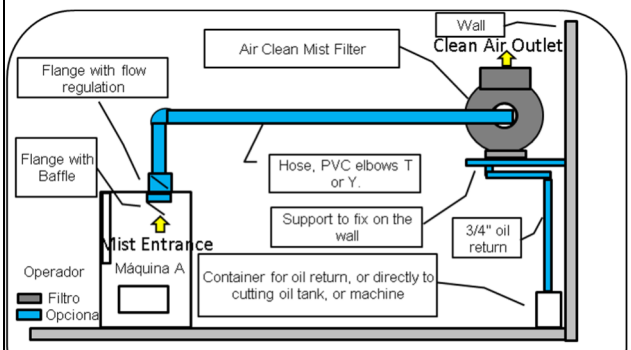

LAYOUT 8 - Installation of Filter with Vertical capture and Fixed to a support on the wall.
Options: Flange with Flow Adjustment and Flange with Deflector

LAYOUT 8 - Installation of Filter with Vertical capture and Fixed to a support on the wall.
Optional: Flange with Flow Adjustment and Flange with Deflector.

Installing a Mist Filter on a support next to a wall or column also facilitates the installation.
a) It has a longer ¾" hose and larger mist removal hoses or PVC tubes.
b) Optionals are offered to facilitate installation and increase filter productivity. As the name suggests, they can be suppressed if the machine already has them or the application does not justify them.
- The flow regulator flange has two basic functions, regulating the flow and reducing electrical energy consumption.
- Flange with deflector prevents oil from being thrown directly into the filter, thus increasing the useful life of the preventive KITs.

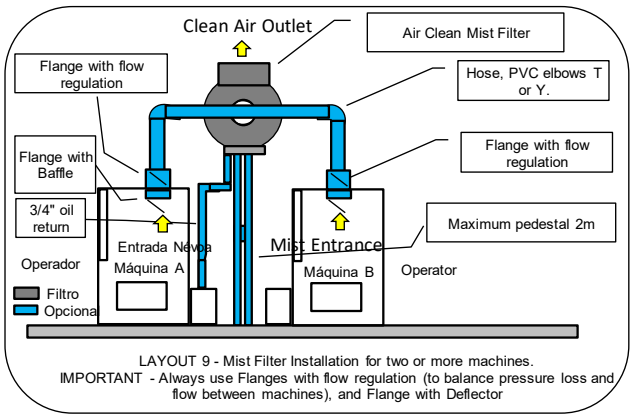

LAYOUT 9 - Mist Filter Installation for two or more machines.
IMPORTANT - Always use Flanges with flow regulation (to balance pressure loss and flow between machines), and Flange with Deflector

LAYOUT 9 - Mist Filter Installation for two or more machines.
IMPORTANT: always use Flanges with flow regulation, to balance pressure loss and flow between machines and Flange with Deflector.

Installation for two or more machines.
The filter flow must be greater than the sum of the required flow rates of all machines.
Installation must be on a pedestal.
It has the advantages of facilitating the layout where the machine has many components in its contour and taking the piping to all the machines in the set.
The main piping must have the same diameter as the Mist Filter inlet.
Important: every machine must have a flange with flow regulation, this way distances and system pressure losses can be compensated. Without these options it will not work well.
a) It has the longest ¾" hose and larger mist removal hoses.
b) Optionals are offered to facilitate installation and increase filter productivity. As the name suggests, they can be suppressed if the machine already has them or the application does not justify them.
- The flow regulator flange has two basic functions, regulating the flow and reducing electrical energy consumption.
- Flange with deflector prevents oil from being routed directly into the filter, thus increasing the useful life of the preventive KITs.
c) The oil return must be to an insulated container, otherwise it could transfer coolant from one machine to another and overflow could occur.

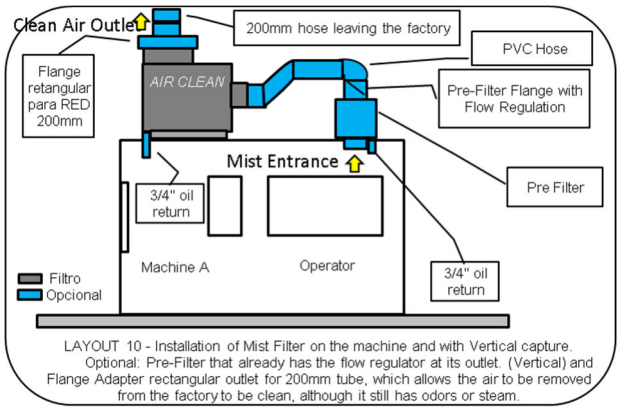

LAYOUT 10 - Installation of Mist Filter on the machine and with Vertical capture.
Optional: Pre-Filter that already has the flow regulator at its outlet (Vertical) and Flange Adapter rectangular outlet for 200mm tube, which allows the air to be removed from the factory to be clean, although it still has odors or steam.

LAYOUT 10 - Installation of Mist Filter on the machine and with Vertical capture.
Optional: Pre-filter that already has the flow regulator at its outlet (vertical) and Flange Adapter rectangular outlet for 200mm tube, which allows clean air to be removed from the factory, even if it still has odors or steam.

What differs from layout 3 is that the filter outlet has a rectangular to round adapter, making it possible to install a tube or hose to take the outlet outside the factory.
Installation of a Mist Filter with Pre-filter is the

	installation method for machines that have small operating cabins and that generate large volumes of mist, such as tool sharpeners. We do not suggest the Flange with Deflector, as the Pre-filter already has this element internally. a) It has the advantages of having two filtration stages (one static: Pre-Filter and another dynamic: Centrifugal Filter). b) Reduces the cost of preventive filter KITs and ease of maintenance in these changes. c) The oil returns to the machine directly, both in the Filter and Pre-Filter. D) Low cost in installation and preventive maintenance. It is one of the most efficient oil mist filtration configurations.

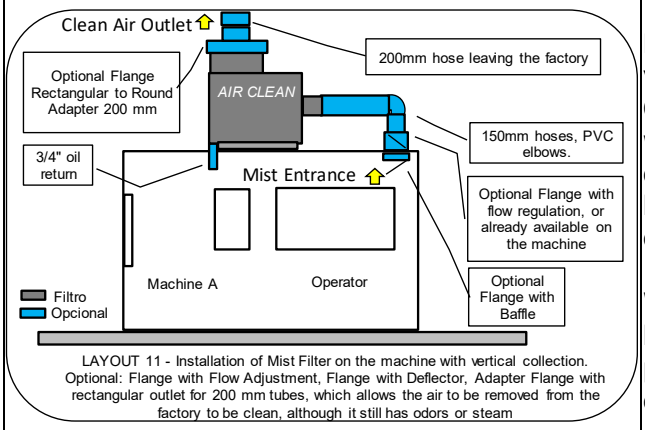

LAYOUT 11 - Installation of Mist Filter on the vertical capture machine.
Optional: Flange with Flow Adjustment and Flange with Deflector and Adapter Flange rectangular outlet for 200 mm tube, which allows clean air to be removed from the factory, even if it still has odors or steam.

What differs from layout 1 is that the filter outlet has a rectangular to round adapter, making it possible to install a tube or hose to take the output outside the factory.

Installation of the Air Clean Mist Filter.

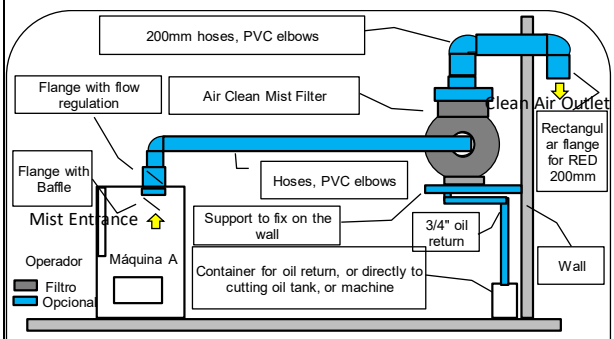

LAYOUT 12 - Installation of Filter with upper capture and fixed to a support on the wall. Optional: Flange with Flow Adjustment, Flange with Deflector, Flange Adapter rectangular outlet for 200 mm tube, which allows the air to be removed from the factory to be clean, although it still has odors or steam

LAYOUT 12 - Installation of Filter with upper capture and fixed to a support on the wall.
Optional: Flange with Flow Adjustment and Flange with Deflector and Adapter Flange rectangular outlet for 200 mm tube, which allows clean air to be removed from the factory, even if it still has odors or steam.

What differs from layout 8 is that the filter outlet has a rectangular to round adapter, making it possible to install a tube or hose to take the output outside the factory.

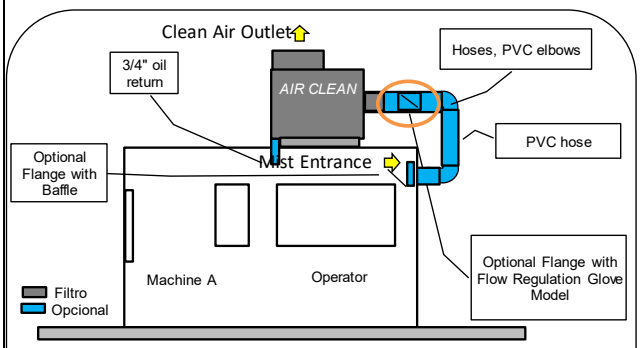

LAYOUT 13 - Installation of Mist Filter on the side capture machine.
Options: Flange with Flow adjustment Sleeve model and with Flange with Deflector

LAYOUT 13 - Installation of Mist Filter on the side capture machine.
Optional: Flange with Flow adjustment Sleeve model and Flange with Deflector.

What differs from layout 2 is that the Flow Regulator Flange is placed in the mist inlet hose line.
This Flange facilitates the installation of the Flow Regulator in any layout.
To install it, just cut the hose near the inlet and place the Sleeve Flange, fixed with two clamps.
This way, it will not be necessary to install the optional standard flow regulator flange.